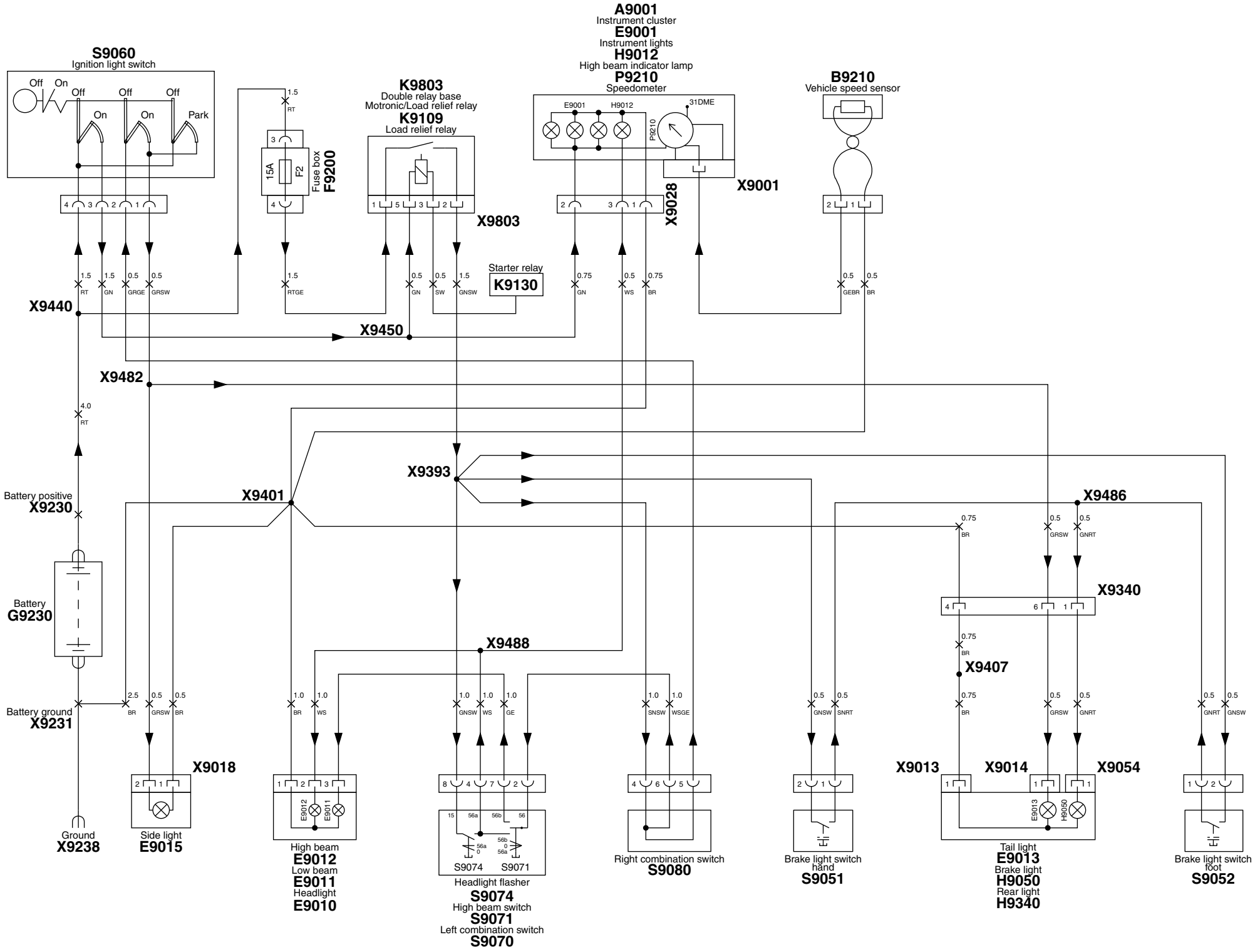
A9001
Instrument cluster
E9001
Instrument lights
H9012
High beam indicator lamp
P9210
Speedometer
S9060
Ignition light switch
Off
On
Off
Off
Off
On
On
Park
K9803
Double relay base
Motronic/Load relief relay
K9109
Load relief relay
Fuse box
F9200
15A
F2
B9210
Vehicle speed sensor
E9001
H9012
31DME
P9210
X9001
X9028
X9803
Starter relay
K9130
X9440
X9450
X9482
X9393
X9401
X9486
Battery positive
X9230
Battery
G9230
Battery ground
X9231
Ground
X9238
X9488
X9340
X9407
X9018
Side light
E9015
High beam
E9012
Low beam
E9011
Headlight
E9010
S9074
S9071
Headlight flasher
S9074
High beam switch
S9071
Left combination switch
S9070
Right combination switch
S9080
Brake light switch
hand
S9051
X9013
X9014
X9054
Tail light
E9013
Brake light
H9050
Rear light
H9340
Brake light switch
foot
S9052

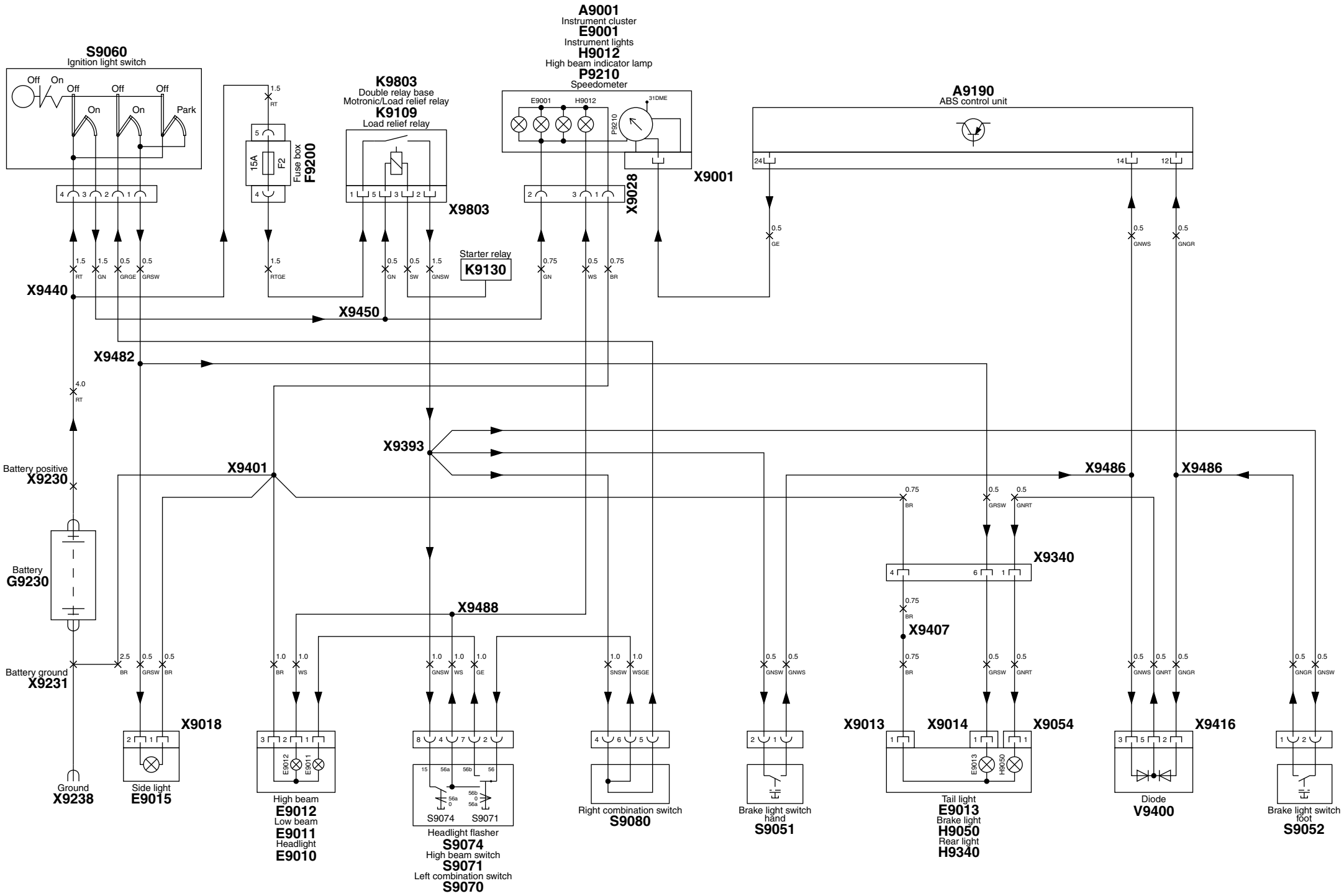
A9001
Instrument cluster
E9001
Instrument lights
H9012
High beam indicator lamp
P9210
Speedometer
S9060
Ignition light switch
Off
On
Park
K9803
Double relay base
Motronic/Load relief relay
K9109
Load relief relay
Fuse box
F9200
15A
F2
A9190
ABS control unit
X9001
X9028
X9803
Starter relay
K9130
X9440
X9450
X9482
X9393
X9401
X9486
Battery positive
X9230
Battery
G9230
Battery ground
X9231
X9488
X9340
X9407
X9018
X9013
X9014
X9054
X9416
Ground
X9238
Side light
E9015
High beam
E9012
Low beam
E9011
Headlight
E9010
Headlight flasher
S9074
High beam switch
S9071
Left combination switch
S9070
Right combination switch
S9080
Brake light switch
hand
S9051
Tail light
E9013
Brake light
H9050
Rear light
H9340
Diode
V9400
Brake light switch
foot
S9052

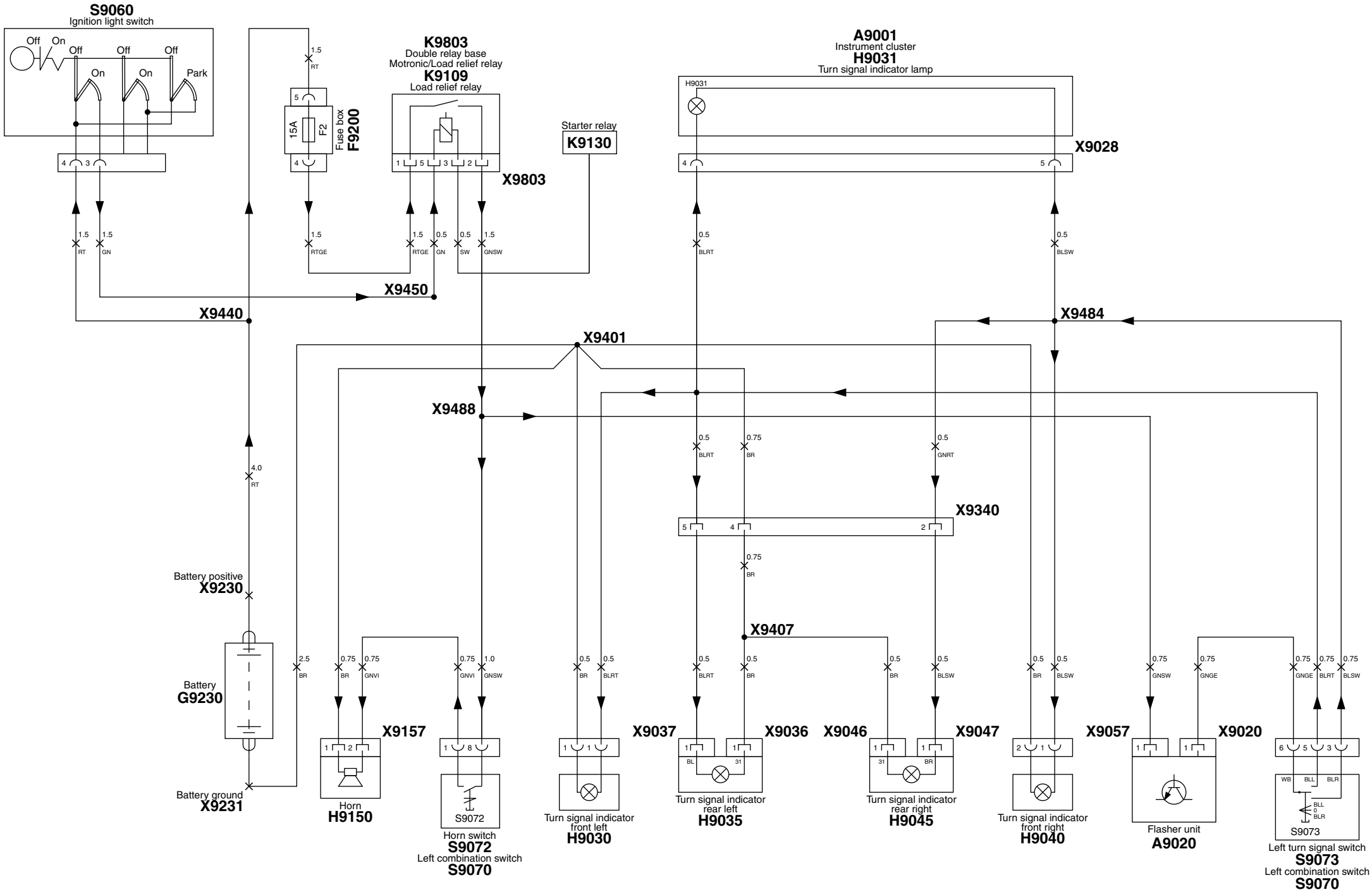
S9060
Ignition light switch
Off
On
Off
On
Off
On
Off
Park
K9803
Double relay base
Motronic/Load relief relay
K9109
Load relief relay
Fuse box
F9200
15A
F2
Starter relay
K9130
A9001
Instrument cluster
H9031
Turn signal indicator lamp
X9028
X9803
X9450
X9440
X9484
X9401
X9488
X9340
X9407
Battery positive
X9230
Battery
G9230
Battery ground
X9231
X9157
Horn
H9150
Horn switch
S9072
Left combination switch
S9070
X9037
Turn signal indicator
front left
H9030
X9036
X9046
Turn signal indicator
rear left
H9035
X9047
Turn signal indicator
rear right
H9045
X9057
Turn signal indicator
front right
H9040
X9020
Flasher unit
A9020
Left turn signal switch
S9073
Left combination switch
S9070

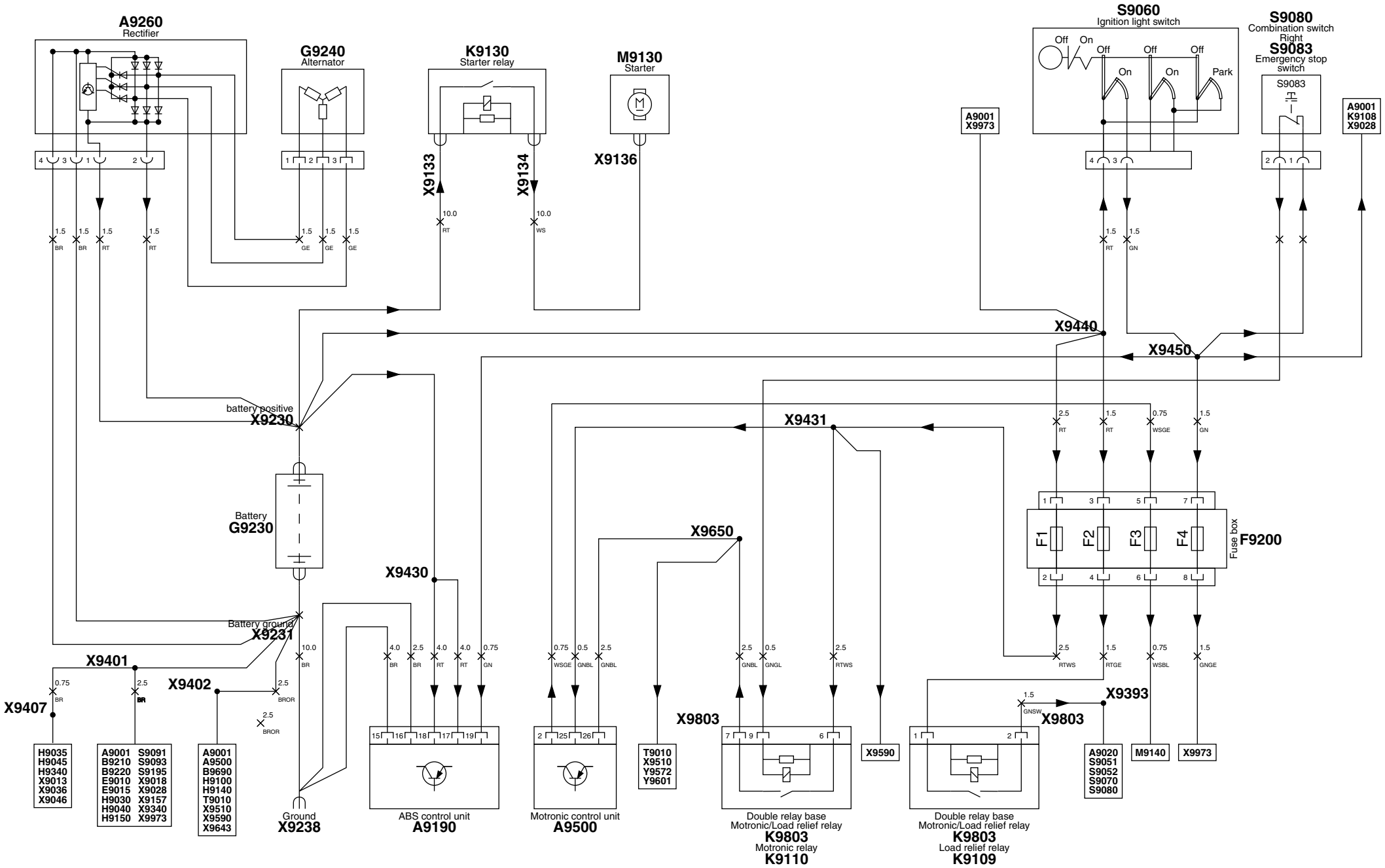
A9260
Rectifier
G9240
Alternator
K9130
Starter relay
M9130
Starter
S9060
Ignition light switch
Off
On
Off
Off
Off
On
On
Park
S9080
Combination switch
Right
S9083
Emergency stop
switch
S9083
A9001
X9973
A9001
K9108
X9028
X9133
X9134
X9136
X9440
X9450
battery positive
X9230
X9431
Battery
G9230
X9650
X9430
Battery ground
X9231
F1
F2
F3
F4
Fuse box
F9200
X9401
X9402
X9407
X9393
X9803
X9803
H9035
H9045
H9340
X9013
X9036
X9046
A9001 S9091
B9210 S9093
B9220 S9195
E9010 X9018
E9015 X9028
H9030 X9157
H9040 X9340
H9150 X9973
A9001
A9500
B9690
H9100
H9140
T9010
X9510
X9590
X9643
Ground
X9238
ABS control unit
A9190
Motronic control unit
A9500
T9010
X9510
Y9572
Y9601
X9590
Double relay base
Motronic/Load relief relay
K9803
Motronic relay
K9110
Double relay base
Motronic/Load relief relay
K9803
Load relief relay
K9109
A9020
S9051
S9052
S9070
S9080
M9140
X9973

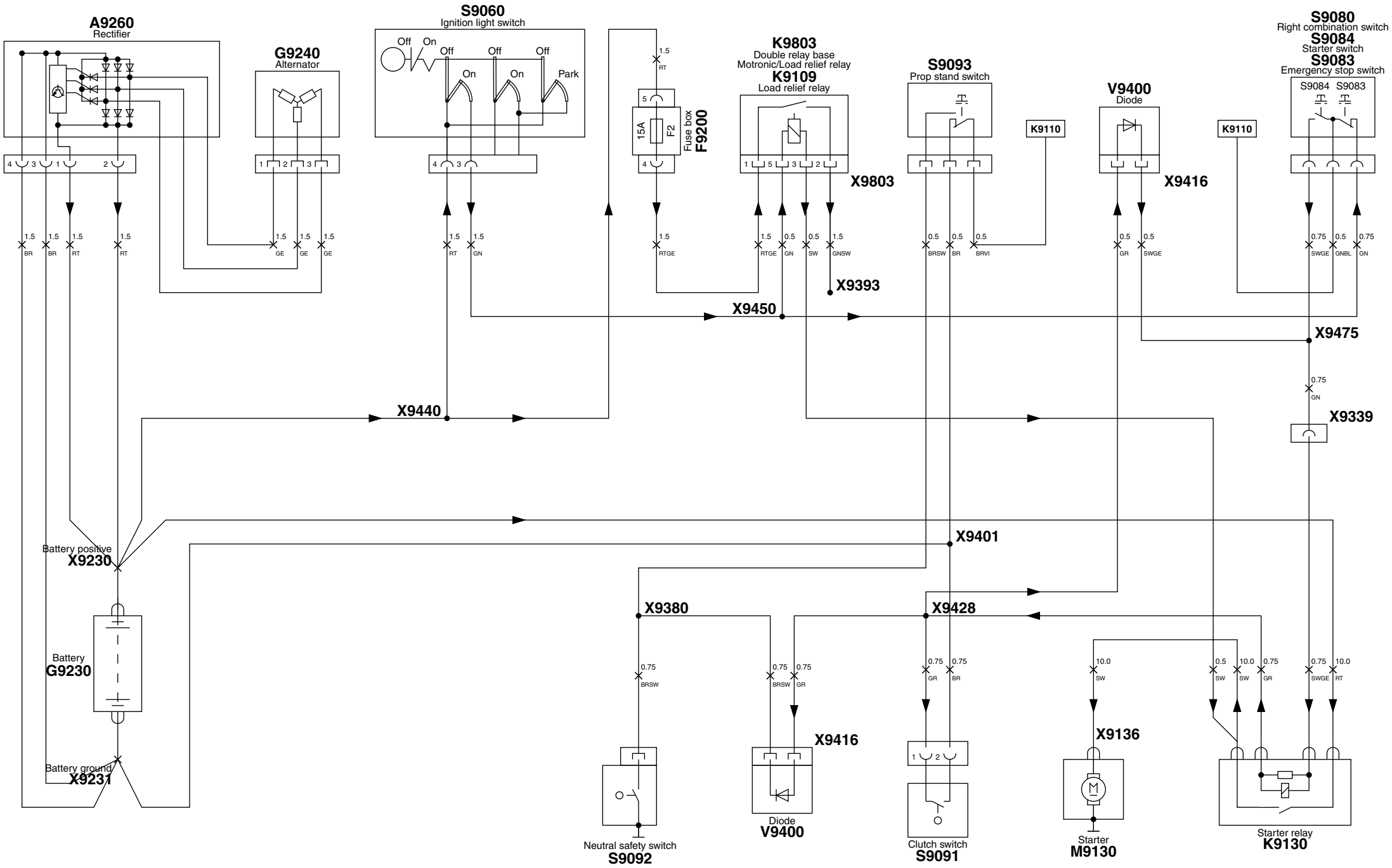
A9260
Rectifier
G9240
Alternator
S9060
Ignition light switch
Off
On
Off
On
Off
On
Off
Park
15A
F2
Fuse box
F9200
K9803
Double relay base
Motronic/Load relief relay
K9109
Load relief relay
X9803
S9093
Prop stand switch
K9110
V9400
Diode
X9416
K9110
S9080
Right combination switch
S9084
Starter switch
S9083
Emergency stop switch
S9084 S9083
X9393
X9450
X9475
X9339
X9440
X9401
Battery positive
X9230
Battery
G9230
Battery ground
X9231
X9380
X9428
X9416
X9136
Neutral safety switch
S9092
Diode
V9400
Clutch switch
S9091
Starter
M9130
Starter relay
K9130

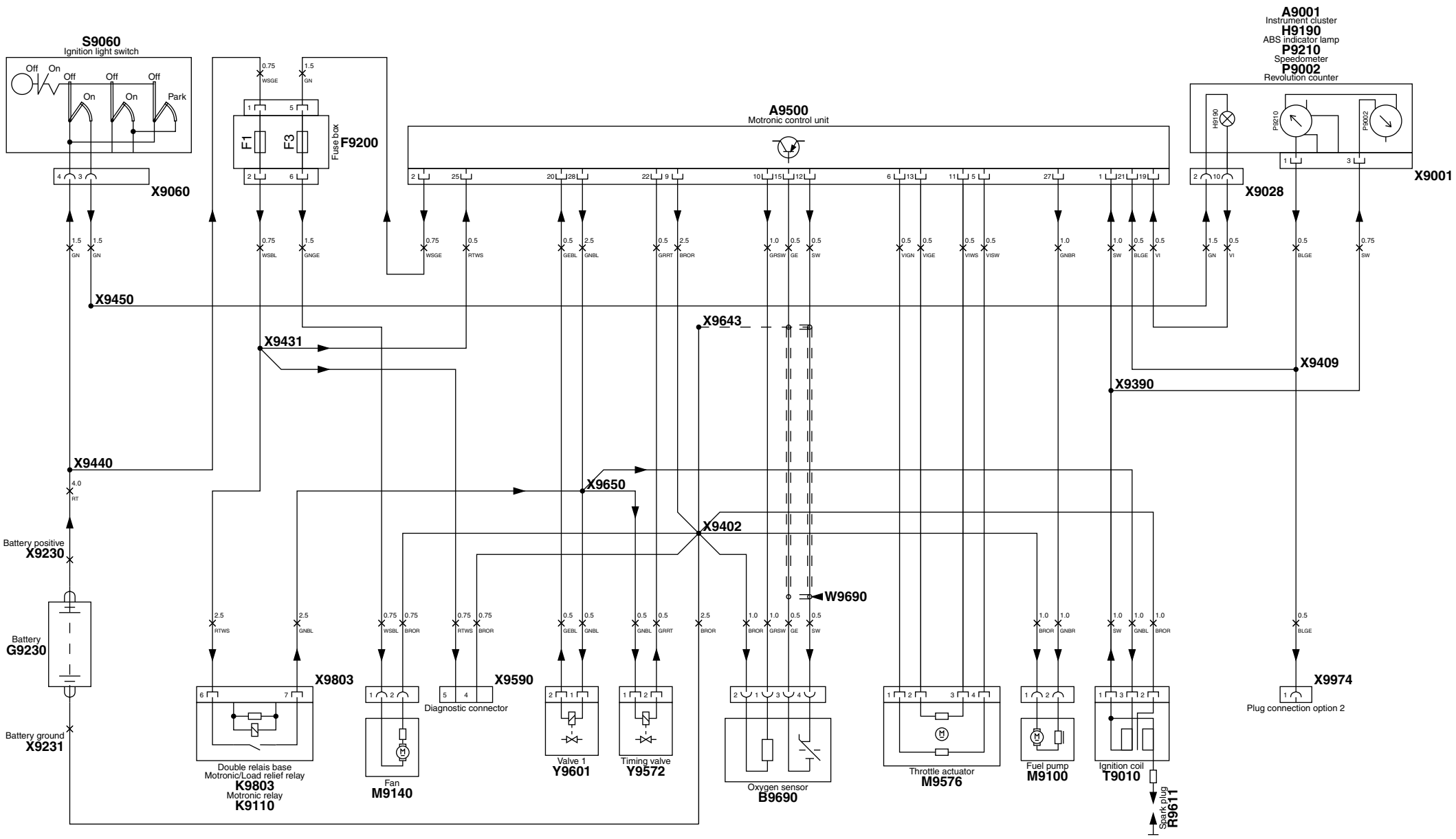
S9060
Ignition light switch
Off
On
Off
On
Off
On
Off
Park
X9060
F1
F3
Fuse box
F9200
A9500
Motronic control unit
A9001
Instrument cluster
H9190
ABS indicator lamp
P9210
Speedometer
P9002
Revolution counter
X9028
X9001
X9450
X9431
X9643
X9409
X9390
X9440
X9650
X9402
W9690
Battery positive
X9230
Battery
G9230
Battery ground
X9231
X9803
Double relais base
Motronic/Load relief relay
K9803
Motronic relay
K9110
Fan
M9140
X9590
Diagnostic connector
Valve 1
Y9601
Timing valve
Y9572
Oxygen sensor
B9690
Throttle actuator
M9576
Fuel pump
M9100
Ignition coil
T9010
Spark plug
R9611
X9974
Plug connection option 2

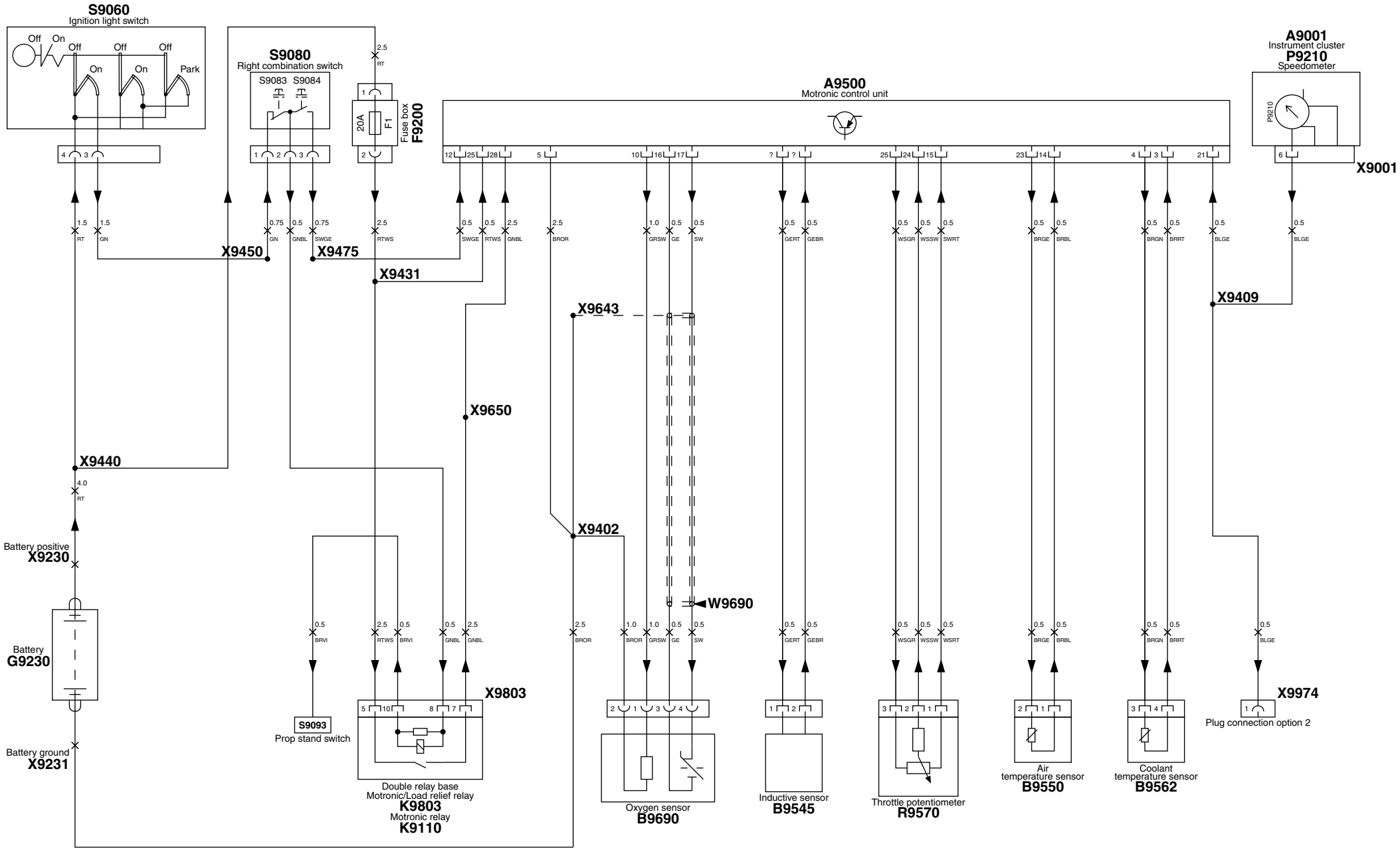
S9060
Ignition light switch
Off
On
Off
On
Off
On
Off
Park
S9080
Right combination switch
S9083
S9084
20A
F1
Fuse box
F9200
A9500
Motronic control unit
A9001
Instrument cluster
P9210
Speedometer
P9210
X9001
X9450
X9475
X9431
X9643
X9650
X9409
X9440
X9402
W9690
Battery positive
X9230
Battery
G9230
Battery ground
X9231
S9093
Prop stand switch
X9803
Double relay base
Motronic/Load relief relay
K9803
Motronic relay
K9110
Oxygen sensor
B9690
Inductive sensor
B9545
Throttle potentiometer
R9570
Air
temperature sensor
B9550
Coolant
temperature sensor
B9562
X9974
Plug connection option 2

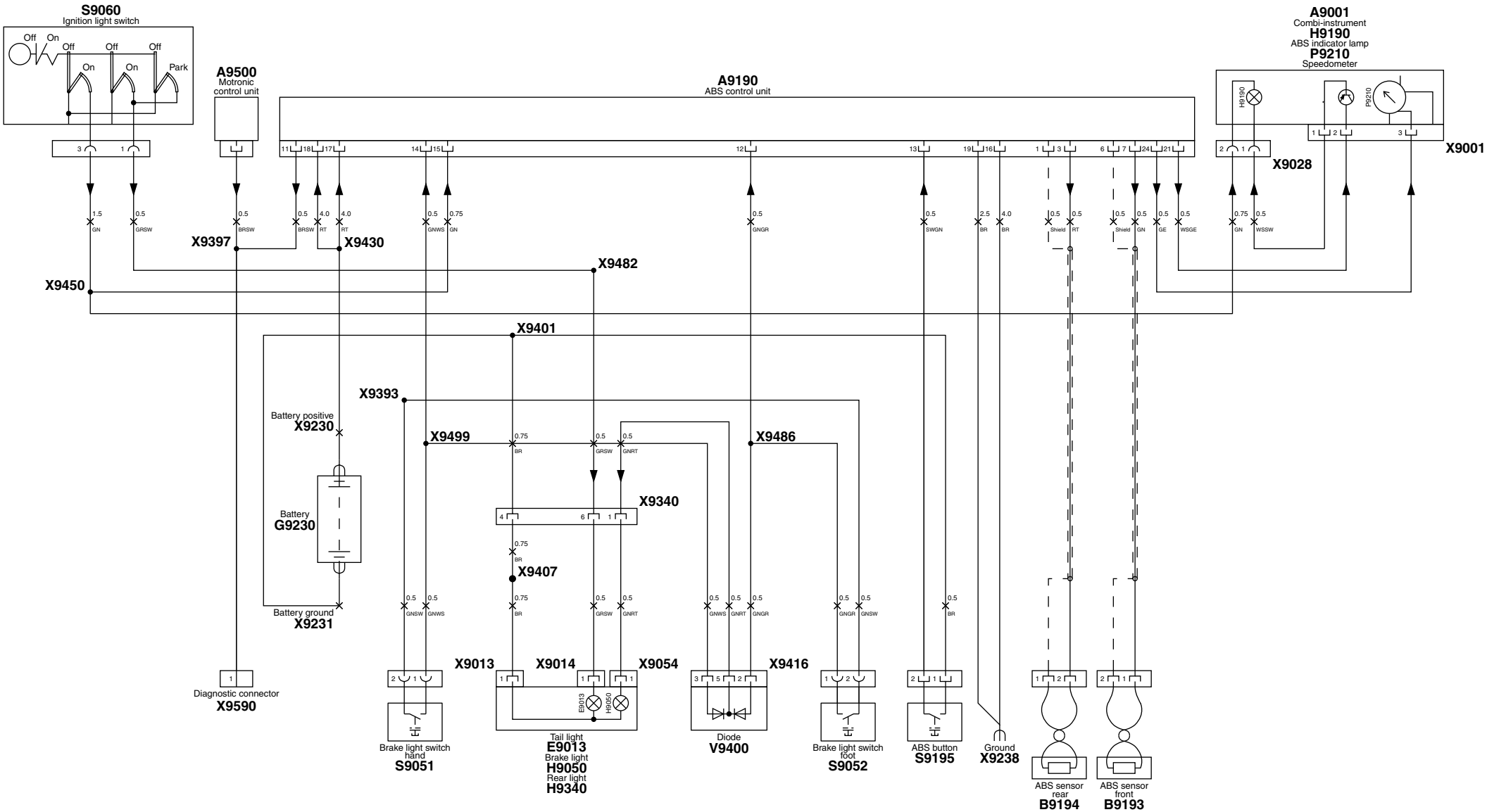
S9060
Ignition light switch
Off
On
Off
Off
Off
On
On
Park
A9500
Motronic control unit
A9190
ABS control unit
A9001
Combi-instrument
H9190
ABS indicator lamp
P9210
Speedometer
X9001
X9028
X9397
X9430
X9482
X9450
X9401
X9393
Battery positive
X9230
X9499
X9486
Battery
G9230
X9340
X9407
Battery ground
X9231
X9013
X9014
X9054
X9416
Diagnostic connector
X9590
Brake light switch hand
S9051
Tail light
E9013
Brake light
H9050
Rear light
H9340
Diode
V9400
Brake light switch foot
S9052
ABS button
S9195
Ground
X9238
ABS sensor rear
B9194
ABS sensor front
B9193